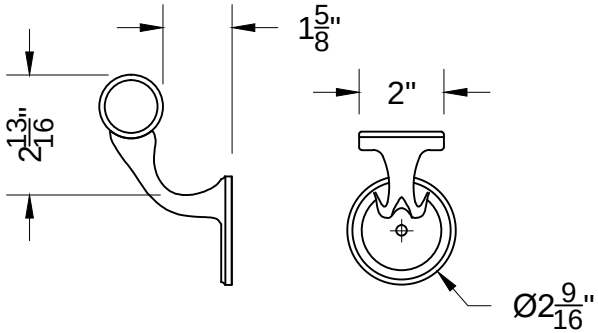

Brackets
Qty: (__)

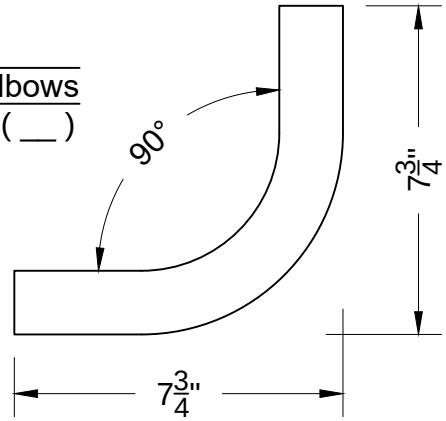

90° Elbows
Qty: (__)

Internal Sleeves
For Splicing
Qty: (__)

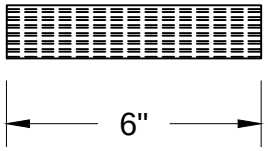

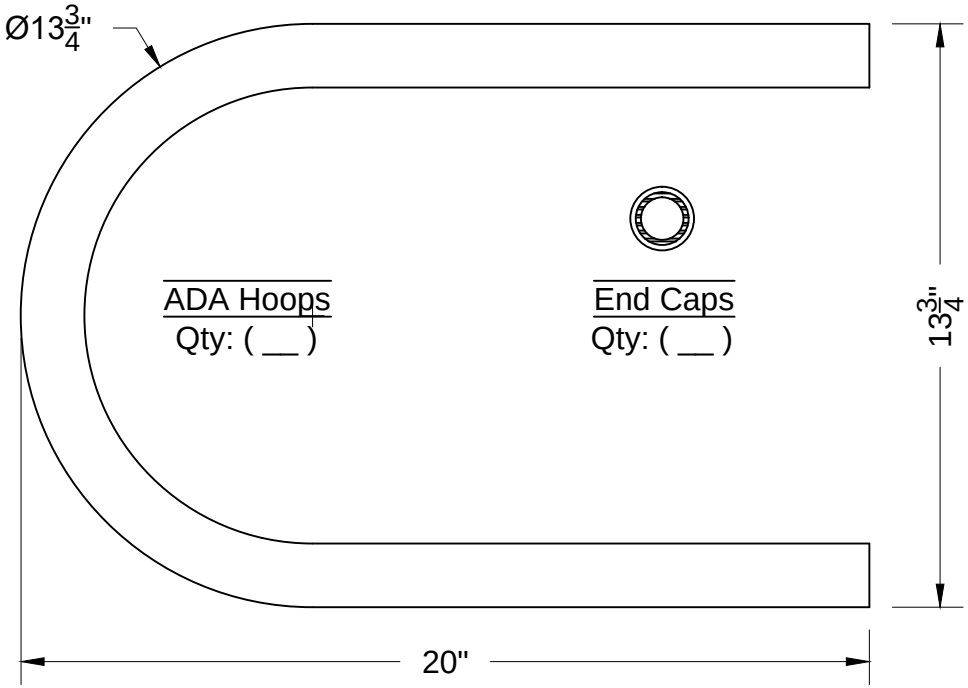

ADA Hoops
Qty: (__)

End Caps
Qty: (__)

Break Over/Under
@ Stairs
Degree: (31°)
Qty: (__)
Degree: (34°)
Qty: (__)
Degree: (36°)
Qty: (__)

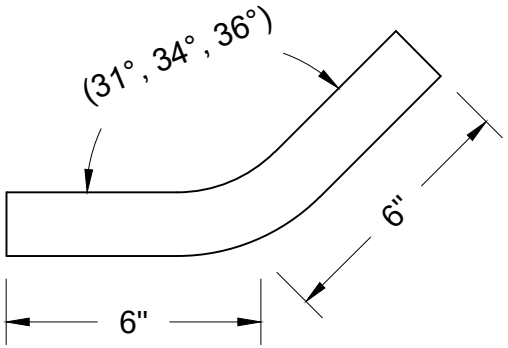

Break Over/Under
@ Ramps
Degree: (5°)
Qty: (__)

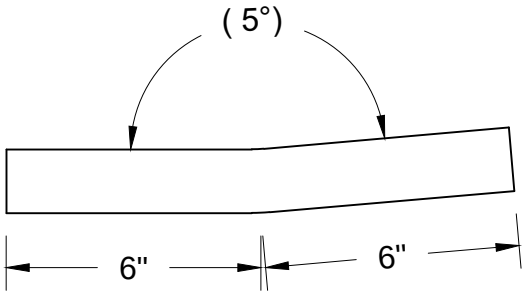

iDeal aluminum fence gates railing
Phone: 386-736-1700 / Fax: 386-822-4950
www.iDeal-ap.com
This drawing is the property of Ideal Aluminum Products.
It is not to be reproduced, copied, or traced
in whole or in part without written concent.

iDeal Rail_Handrail Parts
Ø1.50" x .125" OD Tube